DH362NRK Safety Switch

8.1 Safety Switches

8.2 Enclosed Circuit Breakers

8.3 Enclosed Rotary Disconnects

Learn Online

Rotary Disconnect F-Frame Fusible

Contents

Product Overview

Product Selection Guide

Safety Switch


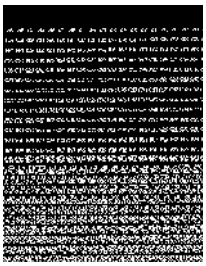
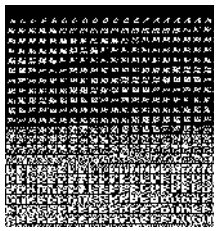

Description	General-Duty	Heavy-Duty	Six-Pole Motor Circuit	Double-Throw	Rotary Switches
Type	Single-throw maximum 240 Vac horsepower rated	Single-throw maximum 600V AC/DC horsepower rated	Single-throw maximum 600 Vac	Maximum 600 Vac horsepower rated	Maximum 600 Vac
Fuse type Fusible	Plug	Cartridge	Cartridge	Cartridge	—
	Cartridge				
Non-fusible	—	—	—	—	—

Safety Switch, continued



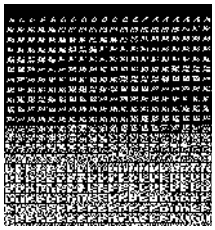

Description	General-Duty	Heavy-Duty	Six-Pole Motor Circuit	Double-Throw	Rotary Switches
Fuse class					
Fusible	—	H	H	H	—
	H	L	H	T (600V)	—
				T (240V)	
				T (800V)	
				T (1200V)	
Non-fusible	—	—	—	—	—
Ampere rating					
Fusible	30	30–600	30–200	30–200	—
	30–600	30–1200		400	
				600	
Non-fusible	30–600	30–1200	30–200	30–1200	16–125
Number of poles					
Fusible	1 and 2	2, 3 and 4	6	2 and 3	0
	2 and 3				
Non-fusible	2 and 3	2, 3 and 4	6	2, 3, 4 and 6	3 and 4
Enclosure types					
NEMA® 1					
Fusible	Yes	Yes, up to 1200A	—	Yes	—
Non-fusible	Yes	Yes	—	Yes	Yes
NEMA 3R					
Fusible	Yes	Yes, up to 1200A	Yes	Yes	—
Non-fusible	Yes	Yes	Yes	Yes	Yes □
NEMA 12					
Fusible	—	Yes, up to 1200A □	Yes □	—	—
Non-fusible	—	Yes, up to 1200A □	Yes □	Yes, up to 400A	Yes □
NEMA 4 painted steel					
Fusible	—	Yes, 400–800A	—	—	—
Non-fusible	—	Yes, 400–800A	—	—	—
NEMA 4X stainless steel					
Fusible	—	Yes, up to 1200A	Yes	—	—
Non-fusible	—	Yes, up to 1200A	Yes	Yes, up to 400A	Yes
NEMA 4X non-metallic					
Fusible	—	Yes, up to 200A	—	—	—
Non-fusible	—	Yes, up to 200A	—	—	Yes
NEMA 7/9					
Fusible	—	Yes, up to 200A	—	—	—
Non-fusible	—	Yes, up to 200A □	—	—	—

Notes

□ NEMA Type 12 enclosures (30–800A) can be field modified to meet NEMA 3R rainproof requirements when a factory provided drain screw is removed.

□ Class J fuse clips provided.

Product Overview

- Used to open or close a circuit
- Non-fusible safety switches provide a means to manually connect or disconnect the load from the source
- Fusible safety switches provide a means to manually open and close a circuit and overcurrent protection by means of installed fuses
- Also commonly referred to as a disconnect switch or disconnect
- Available from 30–1200A

Standards and Certifications

- UL 98
- UL 50
- NEMA KS-1

Double-Throw, continued [1]

Ampere Rating	Catalog Number Eaton	General Electric	Siemens	Square D
Non-Fusible, Four-Pole, Four-Wire, 600 Vac, NEMA 4X				
30	**N/A**	N/A	N/A	N/A
60	**N/A**	N/A	N/A	DTU462DS
100	**N/A**	N/A	N/A	DTU463DS
200	**N/A**	N/A	N/A	DTU464DS
Fusible, Three-Pole, Three-Wire, 600 Vac, NEMA 4X				
30	**DT361FWK**	N/A	F351SSDTK	N/A
60	**DT362FWK**	N/A	F352SSDTK	N/A
100	**DT363FWK**	N/A	F353SSDTK	N/A
200	**DT364FWK**	N/A	F354SSDTK	N/A
400	**DT365FWK**	N/A	F355SSDTK	N/A

Catalog Number Selection

Safety Switch

DH 3 6 1 N D K LW

Switch Type
- **DP** = General-duty/plug fuse
- **DG** = General-duty/cartridge fuse
- **DH** = Heavy-duty
- **DT** = Double-throw
- **DR** = Rotary switch
- **DS** = Classified location with DS interior

Poles/Blades
- **1** = 1-pole
- **2** = 2-pole
- **3** = 3-pole
- **4** = 4-pole
- **6** = 6-pole

Voltage
- **1** = 120 Vac
- **2** = 240 Vac
- **6** = 600 Vac

Ampere Rating
- **1** = 30A
- **2** = 60A
- **3** = 100A
- **4** = 200A
- **5** = 400A
- **6** = 600A
- **7** = 800A
- **8** = 1200A

Fusible/Non-Fusible or Neutral
- **F** = Fusible without neutral
- **U** = Non-fusible
- **N** = Fusible with neutral

NEMA Enclosure Ratings
- **G** = NEMA 1
- **R** = NEMA 3R
- **D** = NEMA 12 or 12/3R
- **P** = NEMA 4 (painted steel)
- **W** = NEMA 4X (corrosion-resistant (304 Grade stainless steel)
- **C** = NEMA 4X non-metallic (for Type DH)
- **X** = NEMA 7/9 (for Type DS)
- **X** = NEMA 4X non-metallic (for Type DR)

Series
- **K** = Design all general-duty switches above 200A and all heavy-duty switches incorporate K-Series switch design features listed below
- **B** = Design general-duty 30–100A
- **H** = General-duty double-throw switch (compact design 30–100A)

Options [1]
- **W** = Upper viewing window [3]
- **LW** = Lower viewing window [3]
- **X** = EnviroLine stainless (enclosure and mechanism)
- **GCL** = Mill-duty

Notes

[1] Always verify the number of poles and wires required since catalog numbers may appear in multiple tables.

[2] See **Pages 17** through **20** for additional Flex Center options.

[3] Effective August 2003, 30–100A window switches are replaced by a full view window that allows blade position verification and blown fuse indication. See **Page 37** for catalog numbers.

This table is intended for use in breaking down existing catalog numbers. It is not intended for building new catalog numbers.

Cartridge Fuse General-Duty Safety Switch

Contents

General Duty

Product Description

- 30–600A
- Suitable for service entrance applications unless otherwise noted
- Fusible and non-fusible switches are 100% load break and 100% load make rated
- The continuous load current of fusible switches is not to exceed 80% of the rating of fuses employed in other than motor circuits. Non-fusible switches are 100% fully rated
- 200–600A features K-Series design
- Horsepower rated
- Fusible and non-fusible switches. Single-pole S/N through four-wire; 120/240, and 240 Vac
- With Class R fuses, switches may be used on systems capable of delivering 100,000A rms symmetrical

Note: Plug fuse switches are not service entrance rated.

120/240 Vac General-Duty, Fusible, Single-Throw

- 30–600A
- Suitable for service entrance applications unless otherwise noted
- Horsepower rated
- Bolt-on hub provision. Provided for general-duty switches in a NEMA 3R enclosure. See **Page 21** for selection
- 200–600A switches incorporate K-Series design

Non-Fusible Switches

The UL listed short-circuit ratings for Eaton's non-fusible switches are based on the switches being properly protected by overcurrent protective devices. For applications that require a UL listed short-circuit rating of 10,000A rms symmetrical or less, an Eaton non-fusible switch must be properly protected by any overcurrent protective device rated no greater than the ampere rating of the switch.

For applications that require a UL listed short-circuit rating of greater than 10,000 rms symmetrical amperes, an Eaton non-fusible switch must be properly protected by the appropriate class and size fusing noted on the switch publication (located on the inside cover).

Otherwise, this non-fusible switch must be replaced with an Eaton fusible switch that utilizes the appropriate fusing required. Molded case circuit breaker protection of non-fusible Eaton switches for applications that require a short-circuit rating of greater than 10,000A rms symmetrical has not been evaluated. Refer to the reference tables for typical Eaton fusible switch UL listed short-circuit ratings.

Note: Safety switch short-circuit ratings are applicable to AC only. Safety switch I^2t and Ip values are identical to UL maximum acceptable I^2t and Ip values for the corresponding class fuse.

Application Description

For residential and commercial applications. Suitable for light-duty motor circuits and service entrance.

Features, Benefits and Functions

General-Duty (Cartridge Fuse)

- Ample wire bending space provides for easier installation
- Visible double-break quick-make, quick-break rotary blade mechanism
- Side opening door on all enclosures
- Mechanically interlocked cover to prevent easy access when the switch is in the ON position
- With Class R fuses, switches may be used on systems capable of delivering 100,000A rms symmetrical
- Clearly visible and accessible neutral where applicable
- Visible ON/OFF indication
- Tangential knockouts on 30–60A designs
- Ample wiring space
- Double padlocking capability on 30–100A
- Triple padlocking capability on 200–600A
- Additional door locking capability
- Bilingual English/Spanish door label on 30–100A
- Tri-lingual nameplates

All general-duty switches above 100A and all heavy-duty switches incorporate these K-Series switch design features.

- Two points of contact provide a positive open and close, easier operation, and also help prevent contact burning for longer contact life

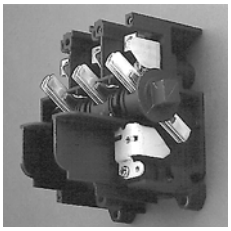

Visible Double-Break Rotary Blade Mechanism

- Protects against accidental contact with energized parts. Probe holes enable the user to test if the line side is energized without removing the shield. Not typically provided on general-duty switches, but available as a field kit or factory installed

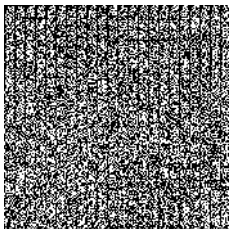

Clear Line Shield

- Provide easy removal of fuses

Built-In Fuse Pullers (NEMA 12 and 4X 30–200A Only)

- The position (ON or OFF) can be clearly seen from a distance and the length provides for easy operation

Clearly Visible Handle

- Personnel safety feature since the large hasp can accommodate up to three 3/8-inch (9.5 mm) shank locks

Triple Padlocking Capability

- Cabinet door can be further padlocked at the top and bottom as applicable

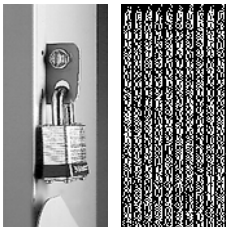

Additional Locking Capability

- Door cannot be opened when the handle is in the ON position. Front and side operable defeater mechanism provides for user access when necessary on single-throw switches

Interlocking Mechanism

- An ample number are provided on the top, bottom and sides of both NEMA Types 1 and 3R enclosures through 200A

Tangential Knockouts

- For switches in a NEMA Type 3R, 30–200A. Use a Myers type hub for all others

Bolt-On Hub Kits

Standards and Certifications

- UL listed File No. E5239
- Meets UL 98 for enclosed switches and NEMA Std. KS-1

Listed

DG321NRB

120/240 Vac General-Duty, Fusible, Single-Throw, continued

System	Ampere Rating	Fuse Type Provision	Maximum Horsepower Ratings □ Single-Phase AC 120V	240V	Three-Phase AC 240V	DC 250V	NEMA 1 Enclosure Indoor Catalog Number	NEMA 3R Enclosure Rainproof Catalog Number
Cartridge Type—Three-Pole, Three-Wire (Three Blades, Three Fuses)—240 Vac								
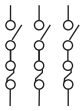	30	—	—	—	—	—	□	□
	60	—	—	—	—	—	□	□
	100	—	—	—	—	—	□	□
	200	—	—	—	—	—	□	□
	400	H	—	—	50–125	—	**DG325FGK** □□	**DG325FRK** □□
	600	H	—	—	75–200	—	**DG326FGK** □□	**DG326FRK** □□
Cartridge Type—Four-Wire (Three Blades, Three Fuses, S/N)—120/240 Vac								
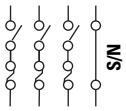	30	H	—	1-1/2–3	3–7-1/2	—	**DG321NGB**	**DG321NRB**
	60	H	—	3–10	7-1/2–15	—	**DG322NGB**	**DG322NRB**
	100	H	—	7-1/2–15	15–30	—	**DG323NGB**	**DG323NRB**
	200	H	—	15	25–60	—	**DG324NGK**	**DG324NRK**
	400	H	—	—	50–125	—	**DG325NGK**	**DG325NRK**
	600	H	—	—	75–200	—	**DG326NGK**	**DG326NRK**

DG322URB

120/240 Vac General-Duty, Non-Fusible, Single-Throw

System	Ampere Rating	Maximum Horsepower Ratings Single-Phase AC 120V	240V	Three-Phase AC 240V	DC 250V	NEMA 1 Enclosure Indoor Catalog Number	NEMA 3R Enclosure Rainproof Catalog Number
Two-Pole, Two-Wire (Two Blades)—240 Vac							
	30	2	3	—	—	**DG221UGB** □	**DG221URB** □
	60	3	10	—	—	**DG222UGB** □	**DG222URB** □
	100	—	15	—	—	**DG223UGB** □	**DG223URB** □
	200	—	—	—	—	□□	□□
Three-Pole, Three-Wire (Three Blades)—240 Vac							
	30	2	3	7-1/2	—	**DG321UGB** □	**DG321URB** □
	60	3	10	15	—	**DG322UGB** □	**DG322URB** □
	100	—	15	30	—	**DG323UGB** □	**DG323URB** □
	200	—	15	60	—	**DG324UGK** □	**DG324URK** □
	400	—	—	125	—	**DG325UGK** □	**DG325URK** □
	600	—	—	200	—	**DG326UGK** □	**DG326URK** □

Notes

□ Maximum hp ratings apply only when dual element time delay fuses are used.
□ Use four-wire catalog numbers below.
□ Solid neutral bars are not included. Order separately from table on **Page 15**.
□ **WARNING!** Switch is not approved for service entrance unless a neutral kit is installed.
□ Use three-wire catalog numbers below.
□ Drilled to accept field installed neutral kits.

All general-duty safety switches are individually packaged.

Accessories are limited in scope on general-duty safety switches. See **Page 15** for availability. In addition, clear line shields are available as an accessory on 200–600A general-duty switches. Catalog Numbers: 200A = 70-7759-11, 400A = 70-8063-8, 600A = 70-8064-8.

8

Technical Data and Specifications

Short-Circuit Ratings Using Class "R", "J" or "T" Fusing Where Applicable

Ampere Rating	Voltage Ratings Type 1	Type 3R
30	100k at 240	100k at 240
60	100k at 240	100k at 240
100	100k at 240	100k at 240
200	100k at 240	100k at 240
400	100k at 250	100k at 250
600	100k at 250	100k at 250

Dimensions

Approximate Dimensions in Inches (mm)

Plug Fuse, 120, 120/240V, Single-, Two-Pole Solid Neutral, Single-Throw

Ampere Rating	NEMA 1 Height	Width	Depth
30	6.88 (174.8)	4.94 (125.5)	3.44 (87.4)

General-Duty, Non-Fusible, 240V, Three-Pole, Single-Throw □

Ampere Rating	Width (W)	Height (H)	Depth (D)	Depth (D2)	Weight Lbs (kg)
NEMA 1					
30	6.38 (162.1)	10.69 (271.5)	6.88 (174.8)	3.75 (95.2)	6 (2.724)
60	8.69 (220.7)	14.19 (360.4)	7.38 (187.5)	4.21 (106.9)	9 (4.086)
100	9.13 (231.9)	18.81 (477.8)	7.38 (187.5)	4.23 (107.4)	12 (5.448)
200	16.00 (406.4)	25.25 (641.4)	11.25 (285.8)	6.14 (156.0)	48 (21.792)
400	23.00 (584.2)	44.75 (1136.7)	12.63 (320.8)	7.27 (184.7)	100 (45.4)
600	24.00 (609.6)	52.25 (1327.2)	14.25 (362.0)	8.95 (227.3)	130 (59.02)
NEMA 3R					
30	6.38 (162.1)	10.81 (274.6)	6.88 (174.8)	3.75 (95.2)	6 (2.724)
60	8.69 (220.7)	14.38 (365.3)	7.38 (187.5)	4.21 (106.9)	9 (4.086)
100	9.13 (231.9)	19.25 (489.0)	7.38 (187.5)	4.23 (107.4)	12 (5.448)
200	16.00 (406.4)	25.50 (647.7)	11.25 (285.8)	6.14 (156.0)	55 (24.97)
400	23.00 (584.2)	45.19 (1147.8)	12.63 (320.8)	7.27 (184.7)	105 (47.67)
600	24.00 (609.6)	52.70 (1338.6)	14.25 (362.0)	8.95 (227.3)	135 (61.29)

NEMA 1-3R 30–100A General-Duty Non-Fusible and Fusible Single-Throw □

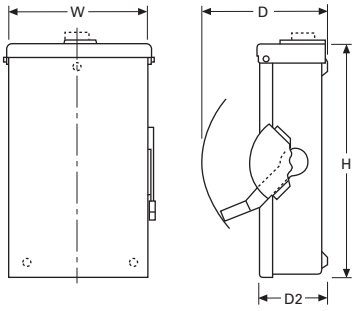

General-Duty, Fusible, 240V, Three-Pole Solid Neutral, Single-Throw □

Ampere Rating	Width (W)	Height (H)	Depth (D)	Depth (D2)	Weight Lbs (kg)
NEMA 1					
30	6.38 (162.1)	10.69 (271.5)	6.88 (174.8)	3.75 (95.2)	6 (2.724)
60	8.69 (220.7)	14.19 (360.4)	7.38 (187.5)	4.21 (106.9)	10 (4.54)
100	9.13 (231.9)	18.81 (477.8)	7.38 (187.5)	4.23 (107.4)	14 (6.356)
200	16.00 (406.4)	24.75 (628.7)	11.25 (285.8)	6.14 (156.0)	48 (21.792)
400	23.00 (584.2)	44.75 (1136.7)	12.63 (320.8)	7.27 (184.7)	110 (49.94)
600	24.00 (609.6)	52.25 (1327.2)	14.25 (362.0)	8.95 (227.3)	145 (65.83)
NEMA 3R					
30	6.38 (162.1)	10.81 (274.6)	6.88 (174.8)	3.75 (95.2)	6 (2.724)
60	8.69 (220.7)	14.38 (365.3)	7.38 (187.5)	4.21 (106.9)	10 (4.54)
100	9.13 (231.9)	19.25 (489.0)	7.38 (187.5)	4.23 (107.4)	14 (6.356)
200	16.00 (406.4)	25.50 (647.7)	11.25 (285.8)	6.14 (156.0)	55 (24.97)
400	23.00 (584.2)	45.19 (1147.8)	12.63 (320.8)	7.27 (184.7)	115 (52.21)
600	24.00 (609.6)	52.70 (1338.6)	14.25 (362.0)	8.95 (227.3)	150 (68.1)

NEMA 1-3R 200–600A General-Duty Non-Fusible and Fusible Single-Throw

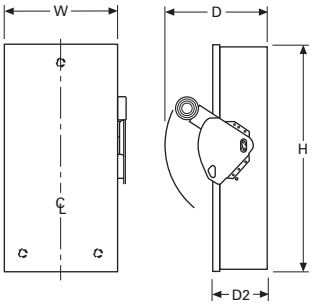

Notes

□ Dimensions are for estimating purposes only.

□ Figure is not applicable to plug fuse.

Heavy-Duty Safety Switch

Contents

Heavy-Duty

Product Description

- 30–1200A
- 600 Vac, 600 Vdc maximum
- Horsepower rated
- Fusible and non-fusible switches are 100% load break and 100% load make rated
- The continuous load current of fusible switches is not to exceed 80% of the rating of fuses employed in other than motor circuits. Non-fusible switches are 100% fully rated
- Suitable for service entrance applications unless otherwise noted

240 Vac Heavy-Duty, Fusible, Single-Throw

- 30–1200A
- Horsepower rated
- Suitable for service entrance use, except four-pole switches
- For factory modifications, refer to **Pages 17** through **20**

600 Vac Heavy-Duty, Fusible, Single-Throw

- 30–1200A
- Horsepower rated
- Suitable for service entrance use, except 1200A on 480Y/277 or 600Y/347 grounded wye systems, per NEC 215-10 and 230-95, and four-pole switches
- For factory modifications, refer to **Pages 17** through **20**

600 Vac Heavy-Duty, Non-Fusible, Single-Throw

- 30–1200A
- Horsepower rated
- Suitable for service entrance use, except 1200A on 480Y/277V or 600Y/347V grounded wye systems, per NEC 215-10 and 230-95, and four-pole switches
- For factory modifications, refer to **Pages 17** through **20**

Application Description

For heavy commercial and industrial applications where reliable performance and service continuity are critical.

For the toughest heavy commercial and industrial applications, refer to **Page 77** for catalog information on our mill-duty safety switch

Features, Benefits and Functions

- Visible double-break quick-make, quick-break rotary blade mechanism. Two points of contact provide a positive open and close, easier operation, and also help prevent contact burning for longer contact life
- Triple padlocking capability. Personnel safety feature since the large hasp can accommodate up to three 3/8-inch (9.5 mm) shank locks. Cabinet door can be further padlocked at the top and bottom
- Interlocking mechanism. Door cannot be opened when the handle is in the ON position. Built-in defeater mechanism provides for user access when necessary
- Deionizing arc chutes; arc chutes confine and suppress the arcs produced by opening contacts under load
- Mechanically interlocked cover to prevent easy access when the switch is in the ON position
- Clear line shield with probe holes
- Clearly visible palm fitting red handle
- Tangential knockouts on NEMA 1 and NEMA 3R enclosures through 200A
- Built-in fuse pullers on NEMA 4X and NEMA 12 enclosures through 200A
- Additional door locking capability
- Complete accessory and renewal parts data shown on inner door label.
- 30–800A NEMA 12 designs convertible to NEMA 3R by opening factory-installed drain hole
- 30–1200A switches are seismic qualified and exceed the requirements of the Uniform Building Code® (UBC) and California Code Title 24
- Tri-lingual nameplates

All general-duty switches above 100A and all heavy-duty switches incorporate these K-Series switch design features.

- Two points of contact provide a positive open and close, easier operation, and also help prevent contact burning for longer contact life

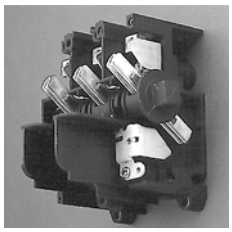

Visible Double-Break Rotary Blade Mechanism

- Protects against accidental contact with energized parts. Probe holes enable the user to test if the line side is energized without removing the shield. Not typically provided on general-duty switches, but available as a field kit or factory installed

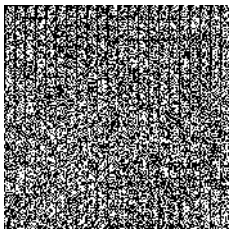

Clear Line Shield

- Provide easy removal of fuses

Built-In Fuse Pullers (NEMA 12 and 4X 30–200A Only)

- The position (ON or OFF) can be clearly seen from a distance and the length provides for easy operation

Clearly Visible Handle

- Personnel safety feature since the large hasp can accommodate up to three 3/8-inch (9.5 mm) shank locks

Triple Padlocking Capability

- Cabinet door can be further padlocked at the top and bottom as applicable

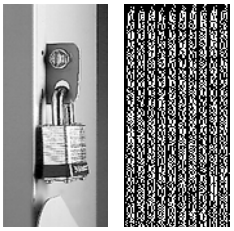

Additional Locking Capability

- Door cannot be opened when the handle is in the ON position. Front and side operable defeater mechanism provides for user access when necessary on single-throw switches

Interlocking Mechanism

- An ample number are provided on the top, bottom and sides of both NEMA Types 1 and 3R enclosures through 200A

Tangential Knockouts

- For switches in a NEMA Type 3R, 30–200A. Use a Myers type hub for all others

Bolt-On Hub Kits

Standards and Certifications

- UL listed File No. E5239
- Meets UL 98 for enclosed switches and NEMA Std. KS-1

Listed

DH362UGK

600 Vac Heavy-Duty, Non-Fusible, Single-Throw, 277/480–600V—NEMA 1, 3R

System	Ampere Rating	Maximum Horsepower Ratings Single-Phase AC 240V	480V	600V	Three-Phase AC 240V	480V	600V	DC 250V	600V	NEMA 1 Enclosure Indoor Catalog Number	NEMA 3R Enclosure Rainproof Catalog Number
Two-Pole—480 Vac—600 Vac or Vdc □ (Suitable for Service Entrance Use with a Neutral Kit Installed)											
	30	3	7-1/2	10	—	—	—	—	15	**DH261UGK**	**DH261URK**
	60	10	20	25	—	—	—	—	25	**DH262UGK**	**DH262URK**
	100	20	30	40	—	—	—	20	25	**DH263UGK**	**DH263URK**
	200	15	50	50	—	—	—	—	50	**DH264UGK**	**DH264URK**
	400	—	—	—	—	—	—	50	50	**DH265UGK**	**DH265URK**
	600	—	—	—	—	—	—	—	50	**DH266UGK**	**DH266URK**
	800	—	—	—	—	—	—	—	—	**DH267UGK**	**DH267URK**
	1200	—	—	—	—	—	—	—	—	□	—
Three-Pole—480 Vac—600 Vac, 250 Vdc (Suitable for Service Entrance Use with a Neutral Kit Installed)											
	30	3	7-1/2	10	10	20	30	5	—	**DH361UGK**	**DH361URK**
	60	10	20	25	20	50	60	10	—	**DH362UGK**	**DH362URK**
	100	20	40	50	40	75	100	20	—	**DH363UGK**	**DH363URK**
	200	15	50	50	60	125	150	40	—	**DH364UGK**	**DH364URK**
	400	—	—	—	125	250	350	50	—	**DH365UGK**	**DH365URK**
	600	—	—	—	200	400	500	—	—	**DH366UGK**	**DH366URK**
	800	—	—	—	—	500	500	—	—	**DH367UGK**	**DH367URK**
	1200	—	—	—	—	500	500	—	—	**DH368UGK**	**DH368URK**
Four-Pole—480 Vac—600 Vac, 250 Vdc											
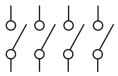	30	10 □	20 □	25 □	10	20	30	5	—	**DH461UGK**	□
	60	20 □	40 □	50 □	20	50	60	10	—	**DH462UGK**	□
	100	40 □	50 □	50 □	40	75	100	20	—	**DH463UGK**	□
	200	50 □	50 □	50 □	60	125	150	40	—	**DH464UGK**	□
	400	50 □	—	—	125	250	350	50	—	**DH465UGK**	□ □
	600	—	—	—	200	400	500	—	—	**DH466UGK**	□ □
	800	—	—	—	—	—	—	—	—	□	□ □

Notes

□ DC rating for 800A switches is 250V.
□ Contact the Safety Switch Flex Center (**1-888-329-9272**) for availability of this product.
□ Ratings are for two-phase AC.
□ NEMA 12 enclosures (30–1200A) can be field modified to meet NEMA 3R rainproof requirements when a factory provided drain hole is opened.

Dimensions

Approximate Dimensions in Inches (mm)

Note: Dimensions are for estimating purposes only.

Heavy-Duty, Non-Fusible, 600V, Three-Pole, Single-Throw

Ampere Rating	Width (W)	Height (H)	Depth (D)	Depth (D2)	Weight Lbs (kg)
NEMA 1, 3R					
30	8.13 (206.5)	15.88 (403.4)	10.00 (254.0)	5.25 (133.3)	16 (7.264)
60	8.13 (206.5)	15.88 (403.4)	10.00 (254.0)	5.25 (133.3)	16 (7.264)
100	11.13 (282.7)	21.69 (550.9)	10.00 (254.0)	5.25 (133.3)	22 (9.988)
200	16.00 (406.4)	27.63 (701.8)	11.25 (285.8)	6.14 (156.0)	46 (20.884)
400	23.00 (584.2)	45.19 (1147.8)	12.63 (320.8)	7.27 (184.7)	110 (49.94)
600	24.00 (609.6)	52.70 (1338.6)	14.25 (362.0)	8.95 (227.3)	135 (61.29)
800	25.38 (644.7)	56.69 (1439.9)	14.25 (362.0)	8.95 (227.3)	158 (71.732)
1200	41.47 (1053.3)	70.31 (1785.9)	19.94 (506.5)	12.44 (316.0)	430 (195.22)
NEMA 12, 4X Stainless Steel, 4					
30	8.13 (206.5)	12.13 (308.1)	10.00 (254.0)	5.50 (139.7)	17 (7.718)
60	8.13 (206.5)	12.13 (308.1)	10.00 (254.0)	5.50 (139.7)	17 (7.718)
100	11.13 (282.7)	24.00 (609.6)	10.25 (260.4)	5.50 (139.7)	28 (12.712)
200	16.00 (406.4)	34.38 (873.3)	11.50 (292.1)	6.44 (163.6)	55 (24.97)
400	23.00 (584.2)	57.63 (1463.8)	12.63 (320.8)	7.19 (182.6)	125 (56.75)
600	24.00 (609.6)	63.00 (1600.2)	14.25 (362.0)	8.88 (225.6)	167 (75.818)
800	25.38 (644.7)	71.75 (1822.5)	14.25 (362.0)	8.88 (225.6)	175 (79.45)
1200	41.47 (1053.3)	70.31 (1785.9)	19.94 (506.5)	13.51 (343.2)	475 (215.65)

Heavy-Duty, Fusible, 240V and 600V, Three-Pole Solid Neutral, Single-Throw

Ampere Rating	Width (W)	Height (H)	Depth (D)	Depth (D2)	Weight Lbs (kg)
NEMA 1, 3R					
30	8.13 (206.5)	15.88 (403.4)	10.00 (254.0)	5.25 (133.3)	20 (9.08)
60	8.13 (206.5)	15.88 (403.4)	10.00 (254.0)	5.25 (133.3)	20 (9.08)
100	11.13 (282.7)	21.69 (550.9)	10.00 (254.0)	5.25 (133.3)	27 (12.258)
200	16.00 (406.4)	27.63 (701.8)	11.25 (285.8)	6.14 (156.0)	52 (23.608)
400	23.00 (584.2)	45.19 (1147.8)	12.63 (320.8)	7.27 (184.7)	120 (54.48)
600	24.00 (609.6)	52.70 (1338.6)	14.25 (362.0)	8.95 (227.3)	153 (69.462)
800	25.38 (644.7)	56.69 (1439.9)	14.25 (362.0)	8.95 (227.3)	168 (76.272)
1200	41.47 (1053.3)	70.31 (1785.9)	19.94 (506.5)	12.44 (316.0)	465 (211.11)
NEMA 12, 4X Stainless Steel, 4					
30	8.13 (206.5)	17.88 (454.2)	10.00 (254.0)	5.50 (139.7)	22 (9.988)
60	8.13 (206.5)	17.88 (454.2)	10.00 (254.0)	5.50 (139.7)	22 (9.988)
100	11.13 (282.7)	24.00 (609.6)	10.25 (260.4)	5.50 (139.7)	30 (13.62)
200	16.00 (406.4)	34.38 (873.3)	11.50 (292.1)	6.44 (163.6)	61 (27.694)
400	23.00 (584.2)	57.63 (1463.8)	12.63 (320.8)	7.19 (182.6)	135 (61.29)
600	24.00 (609.6)	63.00 (1600.2)	14.25 (362.0)	8.88 (225.6)	203 (92.162)
800	25.38 (644.7)	71.75 (1822.5)	14.25 (362.0)	8.88 (225.6)	213 (96.702)
1200	41.47 (1053.3)	70.31 (1785.9)	19.94 (506.5)	13.51 (343.2)	510 (231.54)

NEMA 1-3R Heavy-Duty 30–1200A

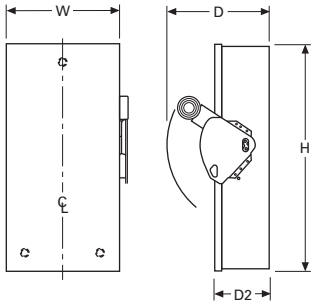

NEMA 4, 4X and 12 Heavy-Duty 30–1200A